PluraSens®

Flameproof Solvent Vapor Detector-Transmitter

E2670-VOC

User Manual

Evikon

Table of contents

Acetone **4**

Benzene **5**

Ethanol **6**

Ethyl acetate **7**

Toluene **8**

Xylene **9**

Specifications **10**

Product description **12**

Safety requirements **12**

Operating conditions **13**

Installation guidelines **13**

Mounting dimensions **15**

Electrical connections **16**
- Correct and incorrect cabling for 24 VAC 18

Operation **19**

Maintenance **19**

Calibration **19**

Delivery set **20**
- Order code for E2670-VOC options 20

Configuring **21**

Return to default settings **21**

Modbus RTU Communication **22**
- RS485 communication interface 22
- Communication parameters 22

Modbus holding registers **22**

Warranty **27**

Manufacturer contacts **27**

Acetone

A colorless organic solvent with a characteristic pungent odor that is volatile and flammable with the chemical formula $(CH_3)_2CO$.

Synonyms/Trade Names: Dimethyl ketone, Ketone propane, 2-Propanone.

Chemical formula		$(CH_3)_2CO$
Molar weight		58
Relative gas density (to air)		2.0
Conversion*		1 ppm = 2.38 mg/m^3
Boiling point		56.11 °C
Low explosive limit (LEL), % vol. in air		2.5
Upper explosive limit (UEL), % vol. in air		12.8
Odor		Characteristic pungent smell
Hazards		Highly flammable. Slightly toxic in normal use. Irritant causing mild skin irritation and moderate to severe eye irritation. At high vapor concentrations, it may depress the CNS.
Exposure limits	8 hours (2000/39/EC)	1900 mg/m^3 / 500 ppm
	NIOSH REL TWA	590 mg/m^3 /250 ppm
	IDLH (NIOSH)	2500 ppm [10%LEL]

Benzene

A colorless liquid with an aromatic odor that is highly flammable with the molecular formula C_6H_6.

Synonyms/Trade Names: Benzol, Phenyl hydride.

Chemical formula		C_6H_6
Molar weight		78
Relative gas density (to air)		2.69
Conversion*		1 ppm = 3.19 mg/m^3
Boiling point		80 °C
Low explosive limit (LEL), % vol. in air		1.2
Upper explosive limit (UEL), % vol. in air		7.8
Odor		Hyacinth-like odor
Hazards		Highly flammable. Irritant. Carcinogen. May cause dizziness; headache, nausea, staggering gait; anorexia, lassitude. Target organs: eyes, skin, respiratory system, blood, central nervous system, bone marrow.
Exposure limits (NIOSH REL)	Ca TWA	0.319 mg/m^3 /0.1 ppm
	STEL 15 minutes	1 ppm
	Ca IDLH	500 ppm

Ethanol

A clear colorless liquid with a faintly sweet odor and pungent taste.

Synonyms/Trade Names: ethyl, alcohol.

Chemical formula		CH_3CH_2OH
Molar weight		46
Relative gas density (to air)		1,59
Conversion*		1 ppm = 1.89 mg/m^3
Boiling point		78.37°C
Low explosive limit (LEL), % vol. in air		3 - 3.3
Upper explosive limit (UEL), % vol. in air		19
Odor		The characteristic smell of alcohol
Hazards		Highly flammable. Gas/air mixtures are explosive. Inhalation of vapors leads to cough, headache, fatigue, and drowsiness. High concentrations may damage the fetus. Repeated high exposure may affect the liver and the nervous system.
Exposure limits according to Commission Directive 2006/15/EC	TWA 8 hours	1210 mg/m^3 / 1000 ppm
	STEL 15 minutes	-

Ethyl acetate

A colorless organic compound with a sweet pear-like smell that is highly flammable.

Synonyms/Trade Names: ethyl ester, acetic ester, EA, EtOAc.

Chemical formula		$C_4H_8O_2$ 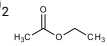
Molar weight		88
Conversion*		1 ppm = 3.60 mg/m^3
Boiling point		77.1 °C
Low explosive limit (LEL), % vol. in air		2
Upper explosive limit (UEL), % vol. in air		11.5
Odor		Sweet “pear” smell
Hazards		Flammable. Short-term exposure to high levels of ethyl acetate results first in irritation of the eyes, nose, and throat, followed by headache, nausea, vomiting, sleepiness, and unconsciousness.
Exposure limits (NIOSH)	TWA 8 hours	1400 mg/m^3 /400 ppm
	IDLH	2000 ppm [10%LEL]

Toluene

A clear, colorless liquid with a sweet smell that is highly flammable.

Synonyms/Trade Names: methylbenzene, phenylmethane.

Chemical formula		$C_6H_5CH_3$
Molar weight		92
Conversion*		1 ppm = 3.77 mg/m^3
Boiling point		110.7°C
Low explosive limit (LEL), % vol. in air		1.1 - 1.27
Upper explosive limit (UEL), % vol. in air		6.75–7.1
Odor		Characteristic “chemical” smell
Hazards		Highly flammable. Gas/air mixtures are explosive. Inhalation possible effects: irritation eyes, nose; lassitude (weakness, exhaustion), confusion, euphoria, dizziness, headache; dilated pupils, lacrimation (discharge of tears); anxiety, muscle fatigue, insomnia; paraesthesia; dermatitis; liver, kidney damage
Exposure limits according to Commission Directive 2006/15/EC	TWA	192 mg/mm^3 / 50 ppm
	STEL	384 mg/mm^3 / 100 ppm

Xylene

A colorless, flammable liquid with a chemical smell. Xylenes are produced by the methylation of toluene and benzene.

The term is used for any of three isomers of dimethylbenzene, or a combination thereof.

Synonyms/Trade Names: xylol, dimethylbenzene.

Chemical formula		$C_6H_4(CH_3)_2$		
Isomers		*ortho*-xylene	*meta*-xylene	*para*-xylene
Molar weight		106		
Conversion*		1 ppm = 4.34 mg/m^3		
Boiling point		144.4 °C	139 °C	138.35 °C
Low explosive limit (LEL), % vol. in air		0.9 - 1.1		
Upper explosive limit (UEL), % vol. in air		6.0–7.0		
Odor		Characteristic “chemical” smell		
Hazards		Flammable. Inhaling can cause dizziness, headache, drowsiness, and nausea.		
Exposure limits according to Commission Directive 2000/39/EC	TWA 8 hours	221 mg/mm^3 / 50 ppm		
	STEL 15 minutes	442 mg/mm^3 / 100 ppm		

Conversion of ppm to mg/m^3 is calculated for 25°C and 1 atm.

Specifications

Sampling method	Diffusion	
Sensor type	Metal oxide semiconductor	
Default calibration	Toluene	
Typical detection range	0...100% LEL	Up to 0...1000 ppm
Resolution / digital unit	0.1% LEL	1 ppm
Response time T90	< 120 s	
Sensor lifetime	> 5 years	
Calibration interval	12 months	
Signal update	Every 1 second	
Load resistance	R_L < (Us - 2 V) / 22 mA for 4-20 mA R_L > 250 kOhm for 0-10 V mode	
Digital interface	RS485, Modbus RTU protocol No galvanic isolation	
Cable connections	Screwless spring-loaded terminal	
Power supply	12...36 VDC (default), 24 VAC or 230 VAC as options	
Power consumption	< 2 VA	
Analog outputs	2 × 4-20 mA / 0-10 V, user settable	
Outputs assignment	OUT1 2 gas; OUT2 2 gas	
Outputs scale width	> 10 × resolution Recommended: 20-100% of the detection range	
Enclosure	Grey die-cast aluminum, wall mount, protection class IP65	
Dimensions	H155 × W145 × D110 mm H155 × W155 × D110 mm (with one cable gland) H155 × W165 × D110 mm (with two cable glands)	
Protection	Flameproof, ATEX: II 3G Ex d IIC T6 Gc II 3D Ex tb IIIB Ip65 T85°C Dc	
ATEX Approvals	**Enclosure:** ATEX / IECEx FTZU 03 ATEX 0207U IECEx FTZU 12.0017U II 2 G Ex db IIC Gb	

	II 2 D Ex tb IIIC Db **Glands:** ATEX / IECEx EESF 19 ATEX 023X II 2G Ex db IIC Gb II 2D Ex tb IIIC Db IP66	
CE marking	According to 2014/30/EU and 2014/34/EU, EN 61000-6-3:2020, EN 61326-1:2013 (EMC, Emissions) EN 61000-6-1:2019, EN 61000-6-2:2019, EN 61326-2-1:2013 (EMC, Immunity) EN 60079-0:2018, EN 60079-1:2014, EN 60079-31:2014, EN 60079-29-1:2016, EN 60079-29-2:2015, EN 60079-29-3:2014	
Operating conditions	-40...+70 °C < 95% RH non-condensing, 0,9...1,1 atm Explosion-safe zones and ATEX Zones 2 and 22 Normal ambient oxygen level Avoid exposure to corrosive gases or silicone-containing products	
Relay option		
Output relays	2 × SPST relays (closing contact), 250 VAC / 30 VDC, 5 A max	
Alarm setpoints (set/release)	RE1 (LOW): 20/16 % LEL; RE2 (HIGH): 50/40% LEL	RE1 (LOW): 100/80 ppm; RE2 (HIGH): 300/240 ppm (for 0...500 ppm range)

Product description

E2670 is a series of flameproof gas detectors-transmitters intended for operation in safe zones and ATEX Zones 2 and 22. E2670 series devices are based on the PluraSens® multifunctional platform and provide all its features. The instruments utilize gas sensors of various types with excellent repeatability, stability, and long lifetime.

The E2670 series provides two independent analog outputs OUT1 and OUT2, user-selectable to 4-20 mA or 0-10 V, proportional to gas concentrations. RS485 Modbus RTU digital communication interface allows easy instrument configuration and integration into various automation systems.

The following features are available as an option:

- Two relays RE1 and RE2 with closing contacts. Relay outputs can be used to switch alarm sirens, ventilation fans, shut-off valves, or other actuators,
- 24 VAC or 230 VAC as options for power supply module,
- Remote probe.

The version of your detector is marked on the package. If the symbol ⚠️ is marked on the equipment, consult the documentation for further information.

Safety requirements

Misuse will impair the protection of the product. Always adhere to the safety provisions applicable in the country of use.

Do not perform any maintenance operation with the power on. Do not let water or foreign objects inside the device.

Removal of the PCB from the enclosure voids the warranty. Do not touch the electronic components directly, as they are sensitive to static electricity.

Connection diagrams can be found in the electrical connections section. The device might not perform correctly or be damaged if the wrong power supply is connected.

External circuits connected to the equipment should have sufficient insulation rating according to the environmental conditions and equipment power.

A disconnecting device that is marked as such and easily accessible should be included in the installation of this product.

The device should be properly earthed.

Operating conditions

The device should be used in a basic electromagnetic environment, where the latter is defined in EN 61326-1. Avoid strong mechanical shock and vibrations. Although E2670 series devices are suitable for use in the presence of flammable dust, special precautions should be taken when operating in a dusty environment. Dust may block the porous filter of the sensor and compromise the results of the measurement. The detector should be inspected regularly if used in a dusty atmosphere. Keep the instrument away from direct sunlight. A sudden temperature or humidity change might affect the sensitivity of the sensor. Make sure that installation and maintenance are performed in an explosion safe atmosphere.

Installation guidelines

Before proceeding with the installation it is mandatory to read the Safety requirements section and make sure to comply with all listed instructions. Installation standards EN 60079-29-2 and EN 45544-4 are also recommended for further instructions and related information about the installation. During the installation of the transmitter the following points must be considered:

- Application (the instrument is intended for leakage control.)
- Properties of the space under investigation (room geometry, direction, and velocity of airflows, etc.),
- Solvent vapors are heavier than air, so the gas detector-transmitter should be placed near the floor or potential leakage or formation source.
- The device should be accessible for maintenance and repair.

The aforementioned conditions above will affect the coverage area of the device. However, the coverage area for a transmitter is usually between 2.5 to 5 meters radius.

For early leakage detection, install the sensor as close as possible to the potential leakage sources (flanges, valves, pressure reducers, pumps, etc.), taking into consideration other points listed above.

For general area monitoring without definite leakage sources, the detectors should be distributed evenly in the room.

For personal safety control, the detectors are installed in the breathing zone (at the height of the head of people or animals). The recommended sensor position is vertical, pointing downwards.

The device is fixed on the wall using two fixing holes located outside the sealed area of the device (see dimensional drawing). Unscrew and detach the lid from the detector. Fix the detector on the wall and earth the enclosure using an earthing terminal on the side of the device.

NOTE! Never perform installation or maintenance in an explosive atmosphere!

Mounting dimensions

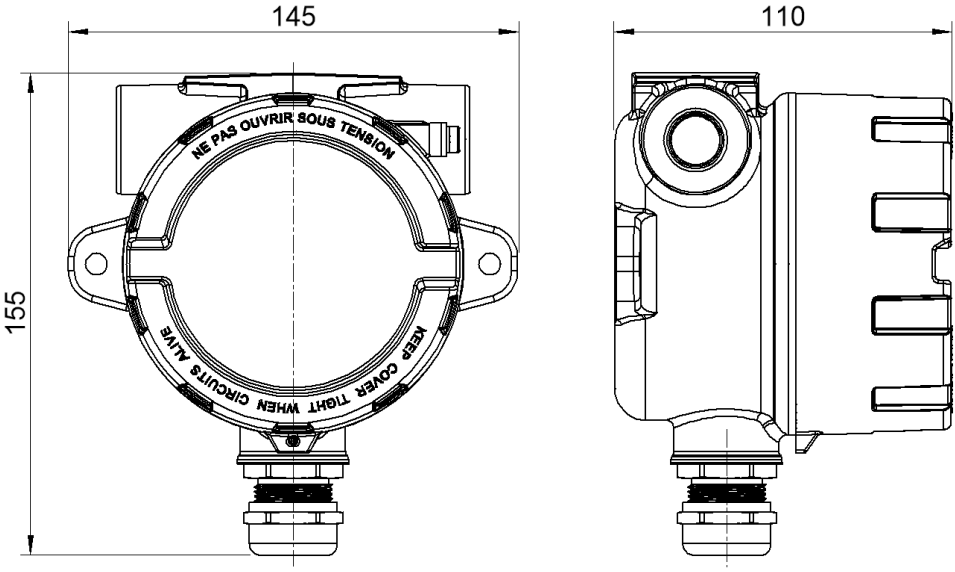

Mounting holes

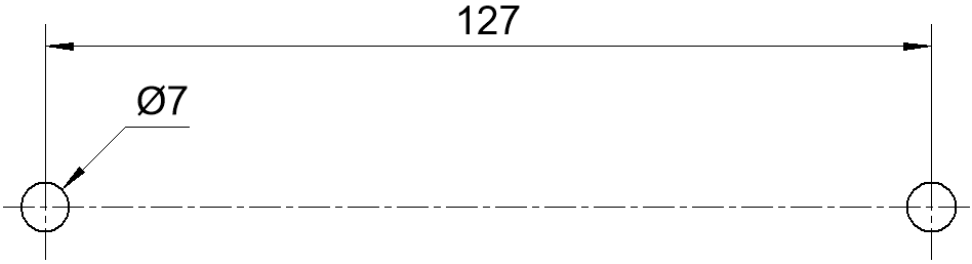

Electrical connections

Unscrew lid from the device. Use the M20 cable gland to let in cables of the power supply and of the external devices. Attach the power cable to the device without turning it on. Using the connection diagram below, connect the analog outputs and digital interface terminals to the relevant devices according to your tasks.

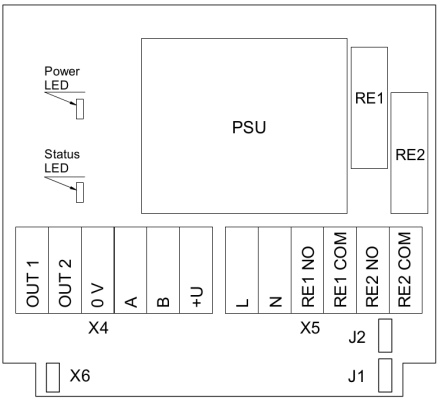

Version with PSU and relays

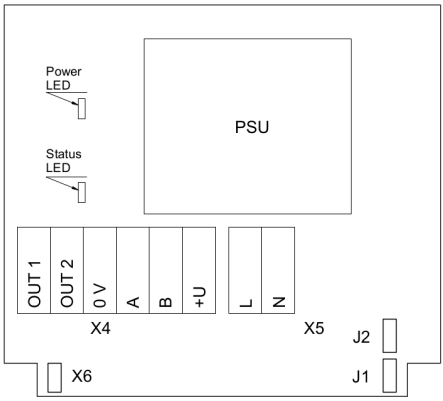

Version with PSU and without relays

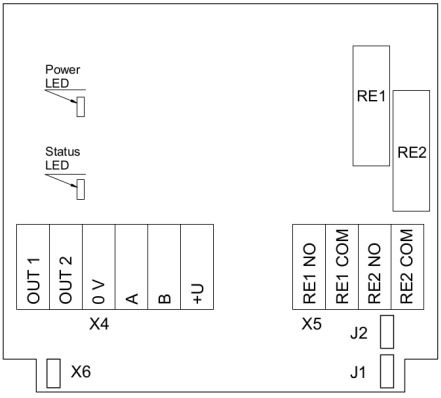

Version without PSU and with relays

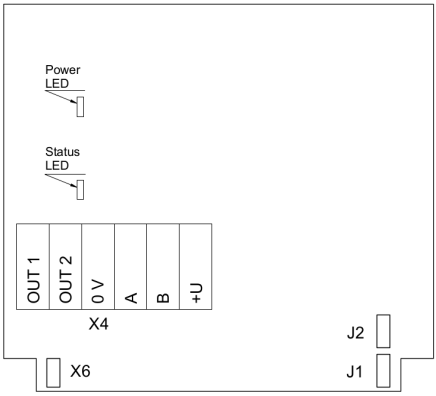

Version without PSU and relays

Jumpers	
J1	OUT1 type (open: 4-20 mA; closed 0-10 V)
J2	OUT2 type (open: 4-20 mA; closed 0-10 V)
X6	Reset Modbus network parameters to default
X4 terminals	
OUT1	4-20 mA / 0-10 V output
OUT2	4-20 mA / 0-10 V output
0V	0 V / 24 VAC Neutral (optional)
A	RS485 A / Data +
B	RS485 B / Data -
+U	+24 VDC / 24 VAC Phase (optional)
X5 terminals (optional)	
L	90…265 VAC Phase
N	90…265 VAC Neutral
RE1 NO	Relay 1, normally open terminal
RE1 COM	Relay 1, common terminal
RE2 NO	Relay 2, normally open terminal
RE2 COM	Relay 2, common terminal

The screwless quick connect spring terminals on the E2670 series devices are suitable for a wide range of wires with a cross-section of 0.2...1.5 mm^2. We recommend striping the wire end by 8...9 mm and using wire end sleeves.

To connect the wire, insert the wire end into the terminal hole. To disconnect, push the spring-loaded terminal lever, pull the wire out, and release the lever.

Use a twisted-pair cable, e.g. LiYY TP 2×2×0.5 mm^2 or CAT 5, to connect the device to the RS485 network. A and B on the device represent DATA+ and DATA- respectively, polarity must be respected when connecting to an external RS485 network.

Both analog outputs can be independently changed between 4-20 mA and 0-10 V type using jumpers J1 (OUT1) and J2 (OUT2). By closing pins on a specific jumper the related output is 0-10 V, with an open jumper the output is 4-20 mA. Power restart is required after changing the position of the jumpers.

NOTE! The outputs are not galvanically isolated from the external power supply and share a common 0V. Allowed load resistance limits are stated in the Specifications table. To power the instrument from an external power source, connect terminals 0V and +U to the source. If the integrated mains power supply module is used, connect terminals L and N to the mains.

NOTE! Actuator short-circuits should be avoided, to protect the instrument relays using external fuses or safety switches.

Correct and incorrect cabling for 24 VAC

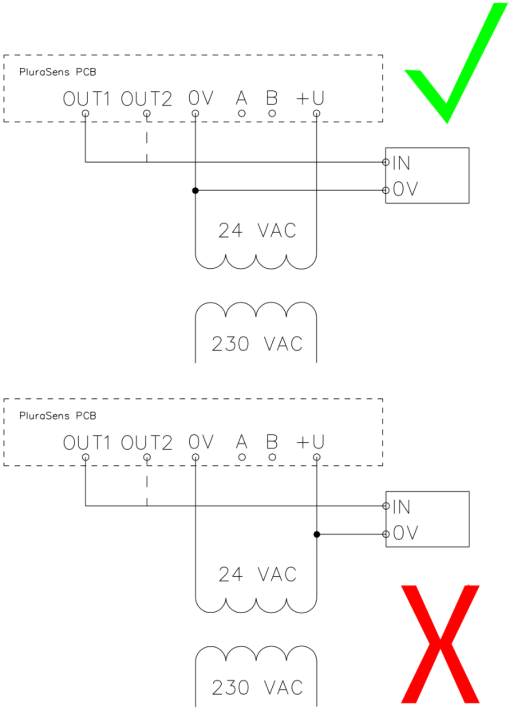

Operation

Turn on the power. The instrument warm-up time takes about 5 minutes after switching on and the final sensor stabilization time to maximum accuracy takes about 60 minutes. The operating status is indicated by the LED on the PCB of the device. The control LED (red) response to different processes is presented in the following table:

Mode	LED mode
During calibration mode or sensor heating period (if activated)	0.5 Hz (50% on, 50% off)
Relay 1 turned on	Blinking 1 Hz (50% on, 50% off)
Relay 2 turned on	Blinking 2 Hz (50% on, 50% off)
During the Modbus communication cycle	Short on-off pulses
Normal operating/measurement	Continuously on or off

Make sure that the transmitter is properly mounted, the external devices connected, the power LED (green) on, and the control LED (red) is constantly lit. Make certain that the cable glands are properly tightened to ensure the conformity to IP65 protection class. Screw the lid back. The device is ready to use.

Maintenance

Do not perform any maintenance operation with the power on.

Clean the device with a soft damp cloth. Do not use any abrasive cleaning agents. Do not immerse the device in water or any cleaning media.

Calibration

E2670-VOC detectors have been calibrated by the Manufacturer with standard gas mixtures before delivery. Provided that the sensor is used under moderate conditions, field recalibration is recommended every 12 months. Please contact your dealer for more information.

Delivery set

- Detector-transmitter E2670
- Mounting accessories:
    - 2 screws with plastic dowels

Order code for E2670-VOC options

E2670 options	Order code
Integrated 90...265 V mains power supply module	E2670-VOC-230
Integrated 24 VAC power supply module	E2670-VOC-24VAC
Two SPST relays	E2670-VOC-R
Glands from both sides	E2670-VOC-GBS

Configuring

A standard configuration kit includes a USB-RS485 converter, fixed flow regulator, gas tubing with applicators, and a software pack. Please contact your Seller for more information.

Detectors- transmitters E2670 share all functionalities of the PluraSens® multifunctional platform. The features and options include:

- Digital output change rate-limiting filter
- Digital integrating (averaging) filter
- Free assignment of each analog output to the chosen parameter
- Flexible setting of analog output scales for each output
- Output zero and slope adjustment for calibration
- Free assignment of each of two relays to the chosen parameter
- Several relay control logic modes
- Switch delays and minimum on/off state durations for each relay

The output scales can be changed by Modbus commands by using the configuration software and the standard configuration kit (see Modbus RTU Communication).

Return to default settings

To reset the device's Slave ID, baud rate, and stop bit numbers to factory settings, proceed as follows:

1. De-energize the device
2. Connect the X6 jumper
3. Turn on the device
4. De-energize the device
5. Disconnect the X6 jumper
6. Turn on the device

NOTE! Cables should be connected / disconnected from PCB when the power supply is unplugged. Connecting or Disconnecting Live wires can result in Corrupt Firmware.

Modbus RTU Communication

RS485 communication interface

Databits: 8 Parity: none / odd / even Stop bits: 1 or 2 Protocol: Modbus RTU	Supported Modbus functions: 03 – Read multiple registers 06 – Write a single register

Communication parameters

Parameter	Permitted values	Default
Supported baud rates	1200, 2400, 4800, 9600, 19200, 38400, 57600	9600
Data bits	8	8
Parity	none / odd / even	none
Stop bits	1, 2	1
Protocol	Modbus RTU	
Modbus functions	03 - Read multiple registers 06 - Write a single register	
Error codes	01 – Illegal function 02 – Illegal data address 03 – Illegal data value 04 – Slave device failure (details of last error 04 can be read from register 0x0008)	

Modbus holding registers

Register addresses are shown 0-based, Address in hexadecimal, Reg in decimal format. Modbus holding register numbers MHR are shown in the decimal 1-based format and may be addressed either from 00001 or 40001 base.

Address	Reg / MHR	RW	Description	Supported values (dec)	Default
0x0001	1 / 40002	R	Hardware version		-
0x0002	2 / 40003	R	Software version		-
0x0003	3 / 40004	R	Product serial number	1...65535	-
0x0004	4 / 40005	RW	Slave ID (net address) *	1...247 **	1
0x0005	5 / 40006	RW	Baud rate *	1200, 2400, 4800, 9600, 19200, 38400, 57600	9600

0x0006	6 / 40007	RW	Response delay, ms	1...255	10
0x0007	7 / 40008	RW	Stop bits, parity bit *	1 – No parity bit, 1 stop bit (default after factory reset) 2 – No parity bit, 2 stop bits 3 – Odd parity, 1 stop bit 4 – Even parity, 1 stop bit **NOTE**: 3 and 4 are available starting from the Software version 0x218 (dec. 536)	1
0x0008	8 /40009	R	Last error code	1...255	-
0x0011	17 / 40018	RW	Technological: age of last data in seconds (read) / restart (write)	0...65535 s (read), writing 42330 restarts the instrument	-

0x00A5	165 / 40166	RW	Zero adjustment for gas data, ADC	-32000...+32000 ADC units	0
0x00A6	166 / 40167	RW	Slope adjustment for gas data	1...65535	512
0x00A7	167 / 40168	RW	The change rate limit for gas units /s	1...32000, 0 - no limit	0
0x00A8	168 / 40169	RW	Integrating filter time constant, s	1...32000 (seconds), 0 - no filter	0
Address	**Reg / MHR**	**RW**	**Description**	**Supported values (dec)**	**Default**
0x00C9	201 / 40202	RW	Parameter tied to analog output 1	0 – None 2 – Gas concentration 9 – Forced Modbus control, value set in MHR / 40204	2
0x00CA	202 / 40203	RW	Parameter tied to analog output 2	0 – None 2 – Gas concentration 9 – Forced Modbus control, value set in MHR / 40205	2
0x00CB	203 / 40204	RW	Forced value for analog output 1***	0...1000 (0.0%...100.0% of output scale)	0
0x00CC	204 / 40205	RW	Forced value for analog output 2***	0...1000 (0.0%...100.0% of output scale)	0
0x00D3	211 / 40212	RW	Parameter tied to relay RE1	0 –none 2 – gas concentration 9 – control by Modbus control, state set in MHR / 40214	2

0x00D4	212 / 40213	RW	Parameter tied to relay RE2	0 – none 2 – gas concentration 9- – control by Modbus control, state set in MHR / 40215	2
0x00D5	213 / 40214	RW	Forced state for relay RE1***	0 –off, 1 – on	0
0x00D6	214/ 40215	RW	Forced state for relay RE2***	0 – off, 1 – on	0
0x00D7	215 / 40216	RW	Switching delay for relay RE1	0...1000 (s)	0
0x00D8	216 / 40217	RW	Switching delay for relay RE2	0...1000 (s)	0
0x00D9	217 / 40218	RW	Minimal on/off time for relay RE1	0...1000 (s)	0
0x00DA	218 / 40219	RW	Minimal on/off time for relay RE2	0...1000 (s)	0

Address	Reg / MHR	RW	Description	Supported values (dec)	Default
0x00DB	219 / 40220	RW	Control logic for relay RE1	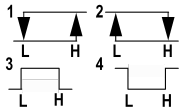 0 – none 1 – relay on at high values 2 – relay on at low values 3 – relay on at values within the range 4 – relay on for the values out of the range	0
0x00DC	220 / 40221	RW	Control logic for relay RE2	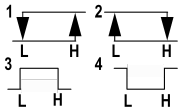 0 – none 1 – relay on at high values 2 – relay on at low values 3 – relay on at values within the range 4 – relay on for the values out of the range	0

0x00DD	221 / 40222	RW	LOW setpoint for relay RE1	0...65535 (gas units)	see Specifications
0x00DE	222 / 40223	RW	HIGH setpoint for relay RE1	0...65535 (gas units)	see Specifications
0x00DF	223 / 40224	RW	LOW setpoint for relay RE2	0...65535 (gas units)	see Specifications
0x00E0	224 / 40225	RW	HIGH setpoint for relay RE2	0...65535 (gas units)	see Specifications

Address	Reg / MHR	RW	Description	Supported values (dec)	Default
0x00FF	255 / 40256	RW	Sensor, analog outputs, LED and buzzer status	bit[0]=0/1 – sensor present/absent, read-only! bit[1]=0/1 – analog outputs deactivated/activated, bit[2]= 0/1 – in case the sensor is absent, turn signaling off/on analog output1, bit[3]=0/1 – in case the sensor is absent, turn on signaling with low current/high current on analog output1; if bit[2]==0 this bit will be ignored, bit[4]=0/1 – in case of sensor absent, turn signaling off/on analog output2 bit[5]=0/1 – in case of sensor absent, turn on signaling with low current/high current on analog output2; if bit[4]==0 this bit will be ignored, bit[6]=0/1 – current/voltage output detected on output1, read-only! bit[7]=0/1 – current/voltage output detected on output2, read-only! bit[8]=0/1 – LED deactivated/activated, bit[9]=0/1 – buzzer deactivated/activated bit[10]=0/1 – LED is on/off in normal condition bit[11]=0/1 – LED and buzzer syncing off/on with RE1 bit[12]=0/1 – LED and buzzer syncing off/on with RE2	user defined

0x0101	257 / 40258	R	Raw gas sensor data	0...4095, ADC units	
0x0103	259 / 40260	R	Gas concentration, gas units	signed integer, -32000...+32000 (gas units)	
0x0105	261 / 40262	RW	0% value for analog output 1	-32000...+32000 gas units	User defined
0x0106	262 / 40263	RW	100% value for analog output 1	-32000...+32000 gas units	User defined
0x0107	263 / 40264	RW	0% value for analog output 2	-32000...+32000 gas units	User defined
0x0108	264 / 40265	RW	100% value for analog output 2	-32000...+32000 gas units	User defined

* – The new value is applied after restart.

** – Broadcast slave ID 0 can be used to assign a new ID to the instrument with an unknown ID. When addressing by ID 0 the device shall be the only Modbus instrument in the network. The device will not respond to the Master command when addressed by ID 0.

*** – This value is dynamic and not kept in EEPROM after a restart.

Warranty

This product is warranted to be free from defects in material and workmanship for a period of one year from the date of the original sale. During this warranty period, the Manufacturer will, at its option, either repair or replace a product that proves to be defective. This warranty is void if the product has been operated in conditions outside ranges specified by the Manufacturer or damaged by customer error or negligence or if there has been an unauthorized modification.

Manufacturer contacts

Evikon MCI OÜ

Teaduspargi 9, Tartu
50411 Estonia
info@evikon.eu
www.evikon.eu