Modbus registers (0-based, decimal format)

Reg	Description	RW	Supported values	Default
1	Hardware version	R	0...65535	0
2	Software version	R	----------	---------
3	Product serial number	R	0...65535	0
4	Slave ID (net address)	RW*	0...247	1
5	Baudrate, baud	RW*	1200, 2400, 4800, 9600, 19200, 38400, 57600	9600
6	Response delay, ms	RW**	1...255 ms	10
7	Stop bits, parity bit	RW*	1 – no parity bit, 1 stop bit (default after factory reset) 2 – no parity bit, 2 stop bits; 3 – odd parity, 1 stop bit; 4 – even parity, 1 stop bit **NOTE**: bits 3 and 4 are available starting from the Software version 0x218 (dec. 536)	1
8	Last error code	R	1...255	0
17	Technological: data age in seconds (read) / restart(write)	RW***	0...65535 s (read), 42330(write)	---------
167	Change rate limit for pressure data, pressure units	RW*	1...32000 pressure units, 0=no limit	0
168	Integrating filter time constant for pressure data, s	RW*	1...32000 s, 0=no filter	0
201	Parameter assigned to OUT1	RW**	0=none, 1=temperature, 2=level, 9=forced Modbus control, value set in 203 (see NOTE below)	0
202	Parameter assigned to OUT2	RW**	0=none, 1=temperature, 2=level 9=forced Modbus control, value set in 204 (see NOTE below)	0
203	Forced value for analog OUT1	RW**	0...1000 (0.0%...100.0% of scale)	0
204	Forced value for analog OUT2	RW**	0...1000 (0.0%...100.0% of scale)	0
255	Sensor control/status	RW*	see Emergency mode paragraph	
257	Raw level data	R	-32000...+32000 level units	
258	Measured temperature, °Cx100	R	signed integer, -4000...+12500 (-40,00...+125,00 °C)	
259	Measured level	R	-32000...+32000 level units	
261	0% value of analog OUT1, pressure units	RW**	-32000...+32000 level units	
262	100% value of analog OUT1, pressure units	RW**	-32000...+32000 level units	
263	0% value of analog OUT2	RW**	-32000...+32000 level units	
264	100% value of analog OUT2	RW**	-32000...+32000 level units	

* - the new value is applied after restart ** - the new value is applied immediately
*** -writing 42330 restarts the device immediately, no response on Modbus Broadcast ID=0 may be used to assign a new ID to device with unknown ID

NOTE Value 1 (temperature) for registers 201 and 202 corresponds to device's internal temperature. The device is not intended for liquid temperature measurement.

Specifications

Sensing method	magnetic float and chained reed switches
Probe length options	from 100 mm to 1000 mm
Resolution	5 mm
Accuracy	± 5 mm
Analog outputs	2 × 4-20 mA or 0-10 V, user settable
Digital interface	RS485, Modbus RTU protocol
Load resistance	R_L < (Us - 3 V) / 22 mA for 4-20 mA R_L > 100 kOhm for 0-10 V mode
Process connection	3/4" thread, outside mounting
Wetted parts	Stainless steel or polyamide, IP68
Float material	Stainless steel for liquids with density > 0.9 g/cm^3
	polyamide for liquids with density < 0.9 g/cm^3
Operating conditions	-40...+85 °C, <99 %RH
Process temperature	Stainless steel float: -40...+120 °C
	Polyamide float: -10...+90 °C
Power supply	11...30 VDC
Power consumption	< 2 VA
Electromagnetic compatibility	according to 2014/30/EU, 2014/35/EU and EN61326-1 requirements
Enclosure	light-grey ABS 82 × 80 × 55 mm, IP65

RS485 communication interface

Parameter	Supported values	Default
Supported baudrates	1200, 2400, 4800, 9600, 19200, 38400, 57600	9600
Data bits	8	8
Parity	none/odd/even	none
Stop bits	1, 2	1
Supported protocols	Modbus RTU	
Supported Modbus functions	03 - read multiple registers 06 - write single register	
Supported Modbus error codes	01 - illegal function 02 - illegal data address 03 - illegal data value 04 - slave device failure (details of last error 04 can be read from register 0x0008)	

Factory settings

Level unit	1 %
OUT1 parameter and scale	2: level, 0...100 (%)
OUT2 parameter and scale	2: level, 0...100 (%)

The correspondence between level value in % and in millimetres is set according to selected probe length.

Evikon MCI OÜ
Tel. +372 733 6310
Teaduspargi 7/9, Tartu
50411 Estonia
info@evikon.eu
www.evikon.eu

Magnetic float level transmitter
E2718

User Manual

Evikon

Magnetic float level transmitter E2718 is a member of new PluraSens® family of multifunctional measurement instruments. The transmitter is intended for level measurement of various liquids including water, beverages and fuel. Application include oil or diesel level control in tanks.
E2718 uses magnetic float and chained reed switches.
E2718 provides two independent analog outputs OUT1 and OUT2, user-selectable to 4-20 mA or 0-10 V, proportional either to level or internal temperature.
RS485 Modbus RTU digital communication interface allows easy configuration of the instrument and its integration into various automation systems through Fieldbus network.

Safety requirements

Always adhere to the safety provisions applicable in the country of use.
Do not perform any maintenance operation with the power on. Do not let water or foreign objects inside the device.

Operating conditions

The device should be used in explosion-safe (non ATEX -rated) indoor areas, without aggressive gases, oil in the atmosphere. See Specifications table for more details.

Installation and connections

1. Prepare the mounting place. The tank should be equipped with a 3/4' treaded male connector situated on its surface in a way that the probe inserted through the connector is positioned strictly vertically.
2. Screw the transmitter to the connector so that the probe is immersed in a liquid. The level of liquid should be between L1 and L1+L2 from the top of the probe (see dimensional drawing below), where L1 > 10 mm and 100 mm < L2 < 1000 mm.
NB! Handle the transmitter with care, protect the probe from bumping and shaking since reed switches are fragile.
3. Detach the lid from the enclosure. Plug the power cable and connect the analog outputs and/or digital interface terminals to the relevant devices according to the connection diagram.
Make certain that the cable gland is properly tightened to ensure the conformity to IP65 protection class.
The screwless quick connect spring terminals of the PluraSens® instruments are suitable for a wide range of wires with cross-section 0,2...1,5 mm^2. The recommended wire stripping length is 8...9 mm. Push the spring loaded terminal lever, insert the wire end into terminal hole and release the lever.
Use twisted pair cable, e.g. LiYY TP 2×2×0,5 mm ^{2} or CAT 5, to connect the device to RS485 network. Use one pair for A and B wires and the second pair for common 0 V and power +U wires. to connect the transmitter to Fieldbus network. Respect polarity. Overall length of all connections via RS485 interface should not exceed 1200 m.
Mounting dimensions and connection diagram are shown below.
NB! The outputs are not galvanically isolated from 24 V power supply and share common 0V. Allowed load resistance limits are stated in Specifications table.

Configuring

Magnetic float level transmitter E2718 shares all functionalities of the PluraSens® multifunctional transmitter platform. The features and options include:

- digital output change rate limiting filter
- digital integrating (averaging) filter
- temperature measurement channel with internal sensor
- free assignment of each analog output to chosen parameter
- flexible setting of analog output scales for each output
- output shift and slope adjustment for calibration
- free assignment of each of two relays to chosen parameter

E2718 can be configured through its RS485 interface by Modbus RTU commands.

E2718 Dimensions

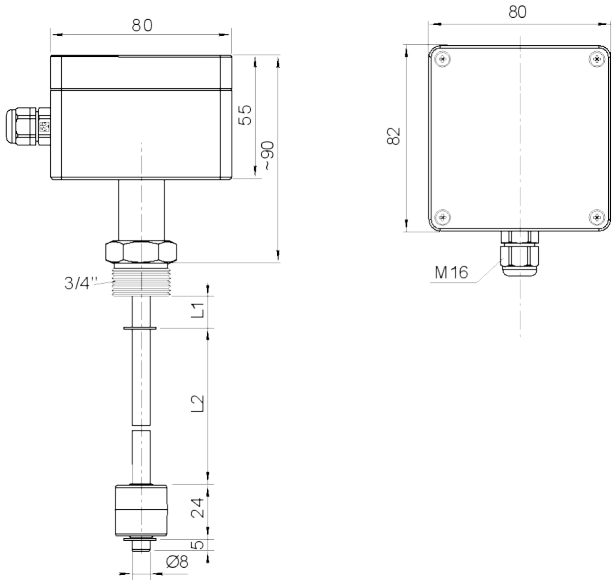

E2718 Connection diagram.

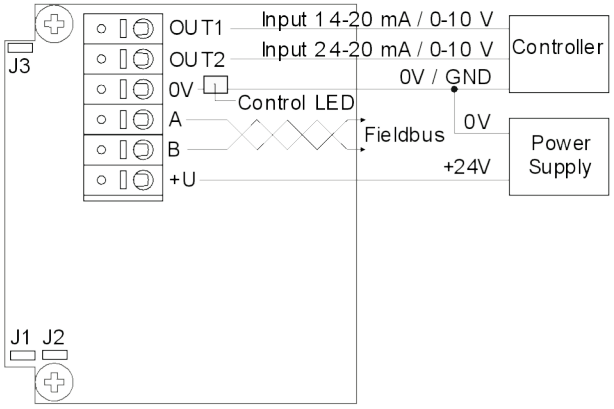

J1: OUT1 type (open: 4-20 mA; closed: 0-10 V)
J2: OUT2 type (open: 4-20 mA; closed: 0-10 V)
J3: return to factory settings

Emergency mode

The current outputs of the detector may be programmed via Modbus commands (register 255) to signal if the connection with the sensor is lost. The signal may be set to 3,8 mA (low current) or 21,5 mA (high current).

Bit	Function	Notes	Default
bit[0]=0/1	sensor present/absent	read-only	
bit[1]=0/1	analog outputs deactivated/activated		1
bit[2]=0/1	in case of sensor absence, turn signaling off/on (OUT1)		1
bit[3]=0/1	in case of sensor absence, turn on signaling with low / high current on OUT1	if bit[2]=0, this bit is ignored	0
bit[4]=0/1	in case of sensor absence, turn signaling off/on (OUT2)		1
bit[5]=0/1	in case of sensor absent, turn on signaling with low / high current on OUT2	if bit[4]=0, this bit is ignored	0
bit[6]=0/1	current/voltage output detected on OUT1	read-only	**user defined**
bit[7]=0/1	current/voltage output detected on OUT2	read-only	**user defined**
bit[8]=0/1	LED deactivated/activated		0
bit[9]=0/1	buzzer deactivated/activated		0

Return to default settings

To reset the device's Slave ID, baudrate and sbit number to factory settings, proceed as follows:
1. De-energize the device
2. Connect the J3 jumper
3. Turn on the device
4. De-energize the device
5. Disconnect the J3 jumper
6. Turn on the device

Delivery set

–Magnetic float level transmitter E2718

Warranty

This product is warranted to be free from defects in material and workmanship for a period of one year from the date of original sale. During this warranty period Manufacturer will, at its option, either repair or replace product that proves to be defective. This warranty is void if the product has been operated in conditions outside ranges specified by Manufacturer or damaged by customer error or negligence or if there has been an unauthorised modification.